5. Exploded View

Indoor Unit

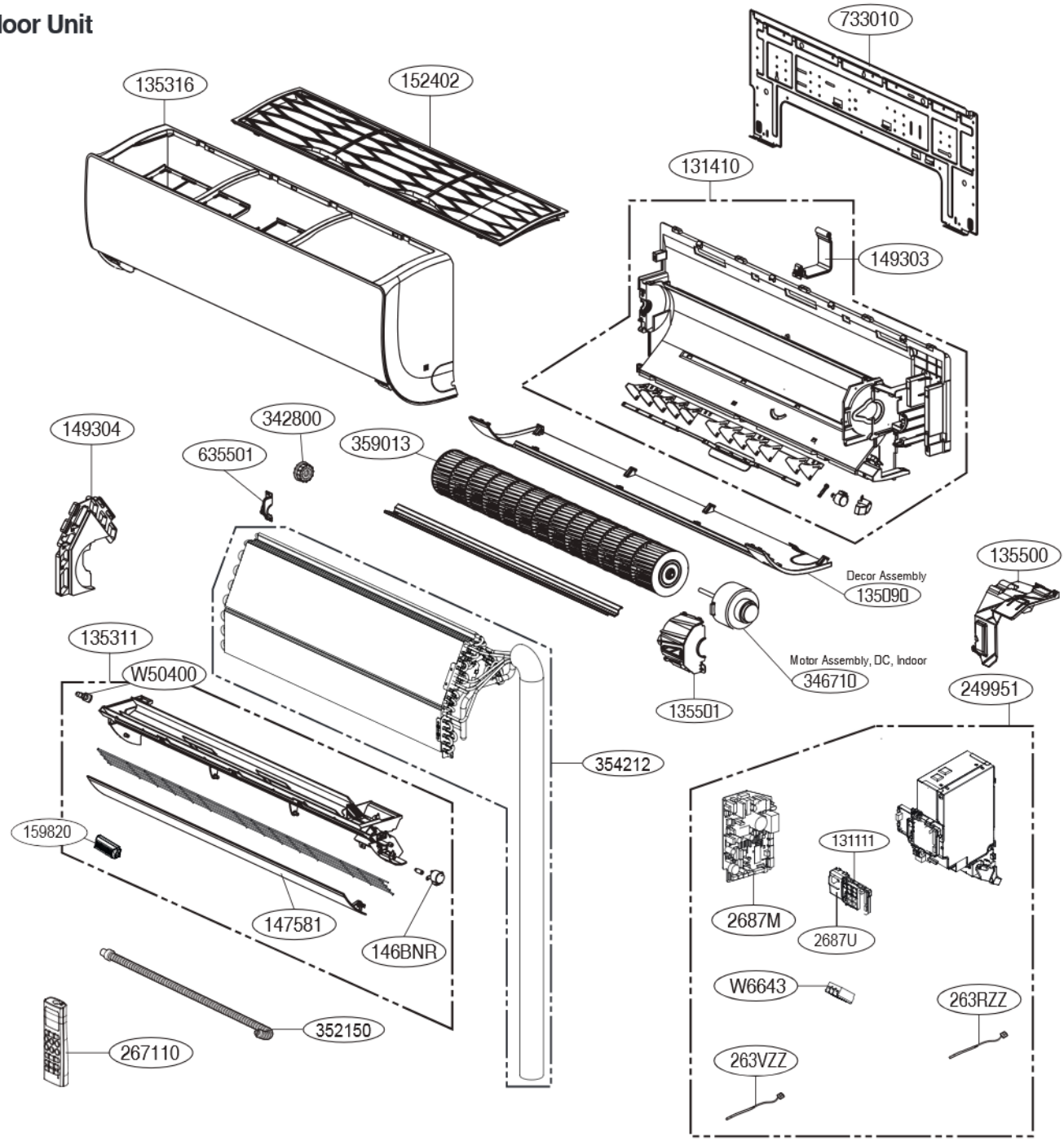

LOC.	Description	Connector
263RZZ	Thermistor for indoor air temperature	CN-TH1
263VZZ	Thermistor for evaporator middle temperature	CN-TH3

Note) * Please ensure GCSC since the replacement parts may be changed depending upon the buyer's request.
Please check the correct parts in View RPL(Replacement Part List) on GCSC.
(GCSC Website http://www.lge.com)