Exploded View

Indoor Unit

LSNC342V4V2.ANCFLAT / LSNC362V4V2.ANCFLAT / LSNC362V4V2.ANCFECU / LSNC362V4V0.ANCFLAT
LSNC366V4W1.ANCBDEL / LSNC366V4W1.ANWFDXB / LSNC366V4W1.ANWFUAE

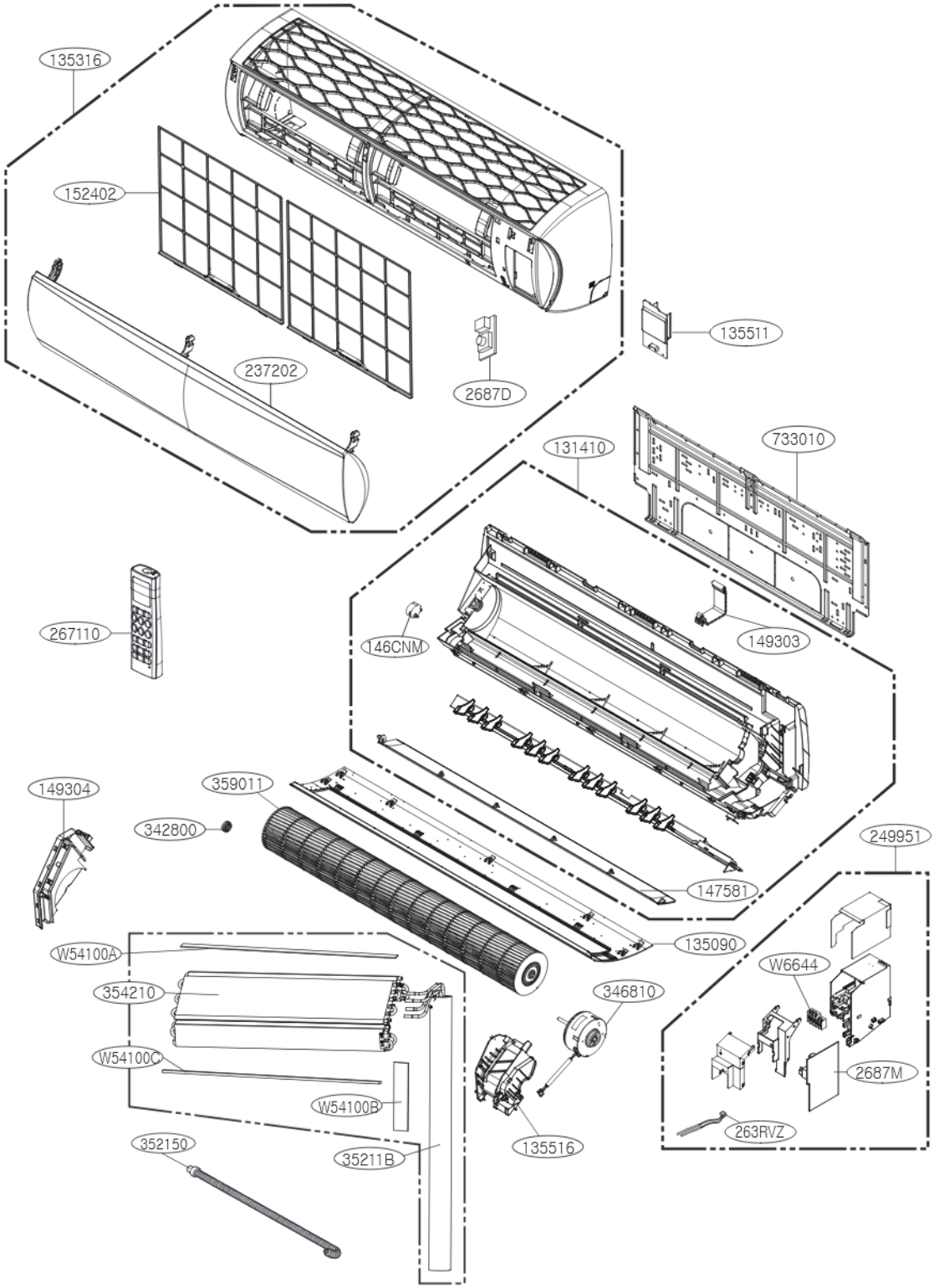

LOC.	Description
263RVZ	Thermistor for indoor air temperature
	Thermistor for evaporating temperature

Copyright © 2013 - 2019 LG Electronics Inc.
All rights reserved. Only training and service purposes.