Outdoor Unit (LSUH126P*L1)

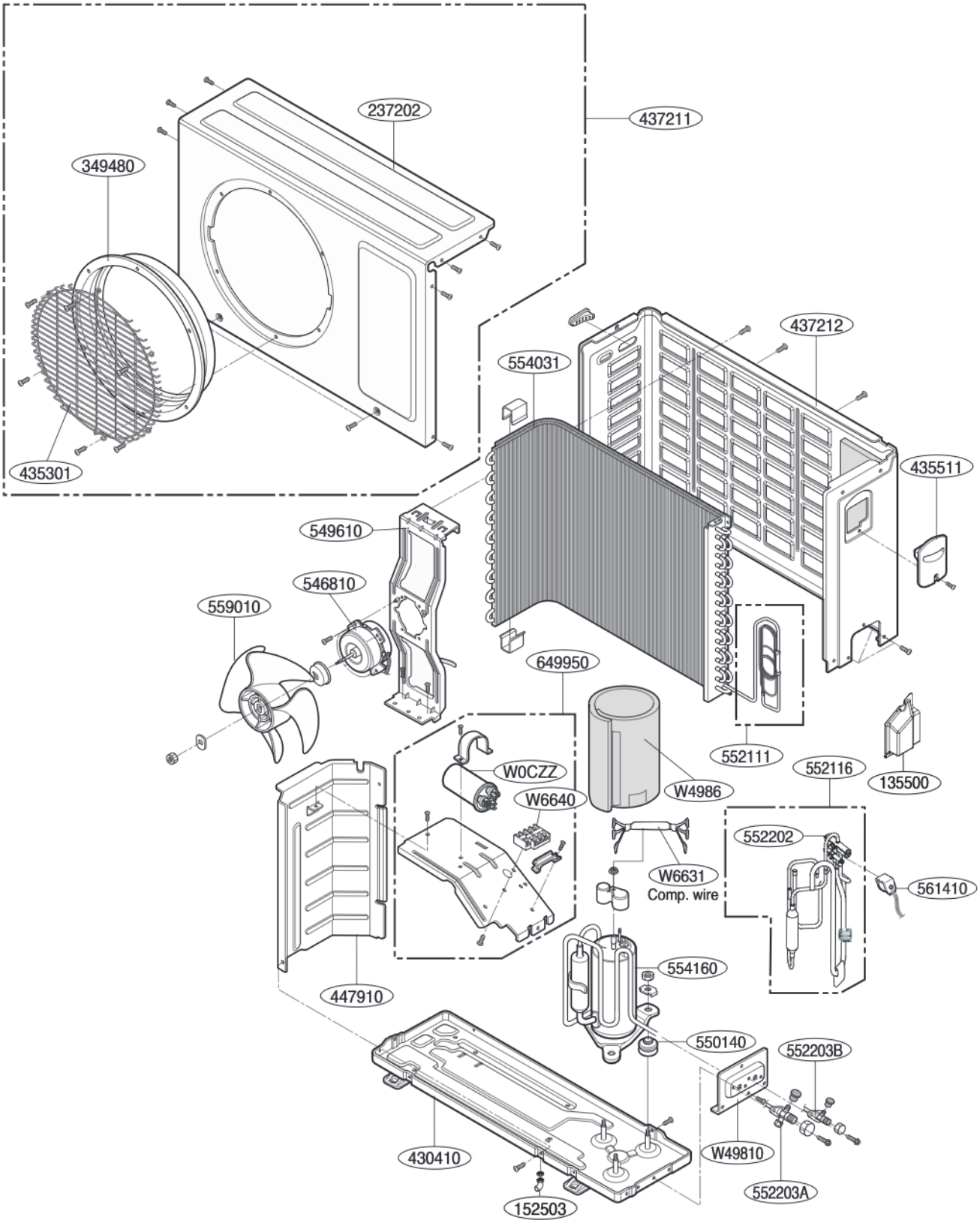

Copyright ©2009 LG Electronics. Inc. All right reserved.
Only for training and service purposes

LGE Internal Use Only