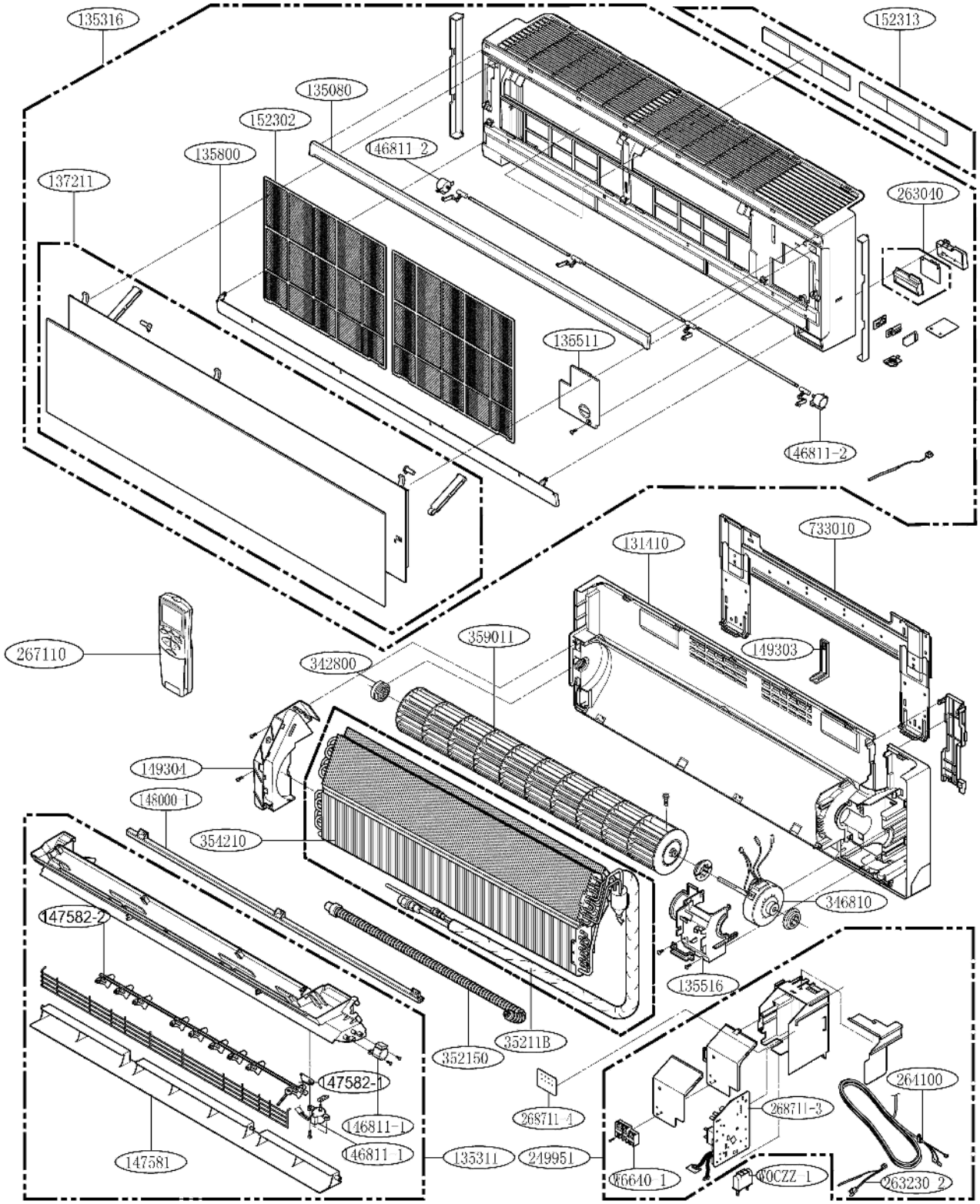Exploded View